LCLS-II-TN-19-08

Beam power ratings for additional LCLS-II stoppers*

J. Welch

August 2, 2019

Contents

1 Introduction

This document follows [1] and [2] and contains beam power ratings for two additional stopper designs. The two additional stopper designs considered here are:

1. 'Photon-Electron' stoppers: Originally these were designed to stop x-rays and bremsstrahlung radiation after the undulator. In LCLS-II they will be 're-purposed' as electron beam stoppers ST34A and ST34B. They will see beam only in accident cases. The design is described in SA-380-533-71 and related drawings. These stoppers were designed for water cooling, though in this document we evaluate their potential when there is no water cooling. A cross section of the beam absorbing slug is shown in Figure 1.

2. 'ST950/960' stoppers: These are two identical existing stoppers located on girder 28-9. They are supposed to stop dark current from the linac (Sectors 21-27 may be energized while RF in sector 28 through 30 must be off) when access is allowed in the BSY. The design is described in ID-902-675-84 and related drawings such as SA-238-040-39. They are designed for water cooling via a cooling panel PF-446-591-32 shown in Figure 2. A cross section of the beam absorbing slug is shown in Figure 3.

Both versions use copper and tungsten to stop the beam. The Photon-Electron Stopper also has a B_4C layer primarily to absorb FEL x-rays. Both incorporate small air gaps that serve as 'burn-through' or 'disaster' monitors. The Photon-Electron Stopper is cylinderical, while the ST950/960 Stoppers are brick shaped.

2 Photon-Electron stoppers

Refer to Figure 1. Beam first hits the thin, 0.08 radiation lengths (X_0), B_4C layer of the Photon-Electron Stopper with little effect. Most of the beam energy is lost when it passes through the titanium plug (2.14 X_0). The next layer is copper, 9.37 X_0 thick, which absorbs most of the lost beam energy. It is followed by a thick tungsten plug, 18.1 X_0. The total stopping power of the slug is then almost 30 X_0. The absorbed energy is transformed to heat and conducted to the surface of the slug. In the original design water in cooling tubes removes the heat from the slug, but in the case of LCLS-II there will not be any water cooling and cooling only occurs through radiation and conduction.

*Work supported in part by the DOE Contract DE-AC02-76SF00515. This work was performed in support of the LCLS-II project at SLAC.

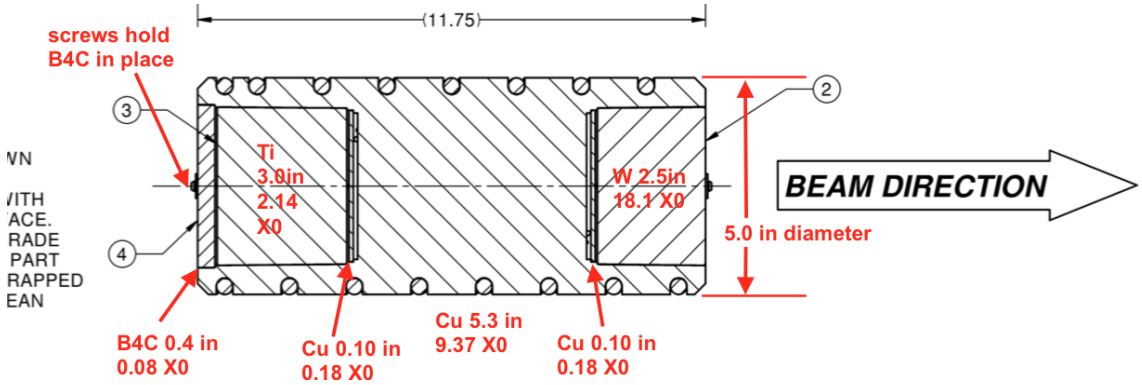

Figure 1: Photon-Electron stopper slug.

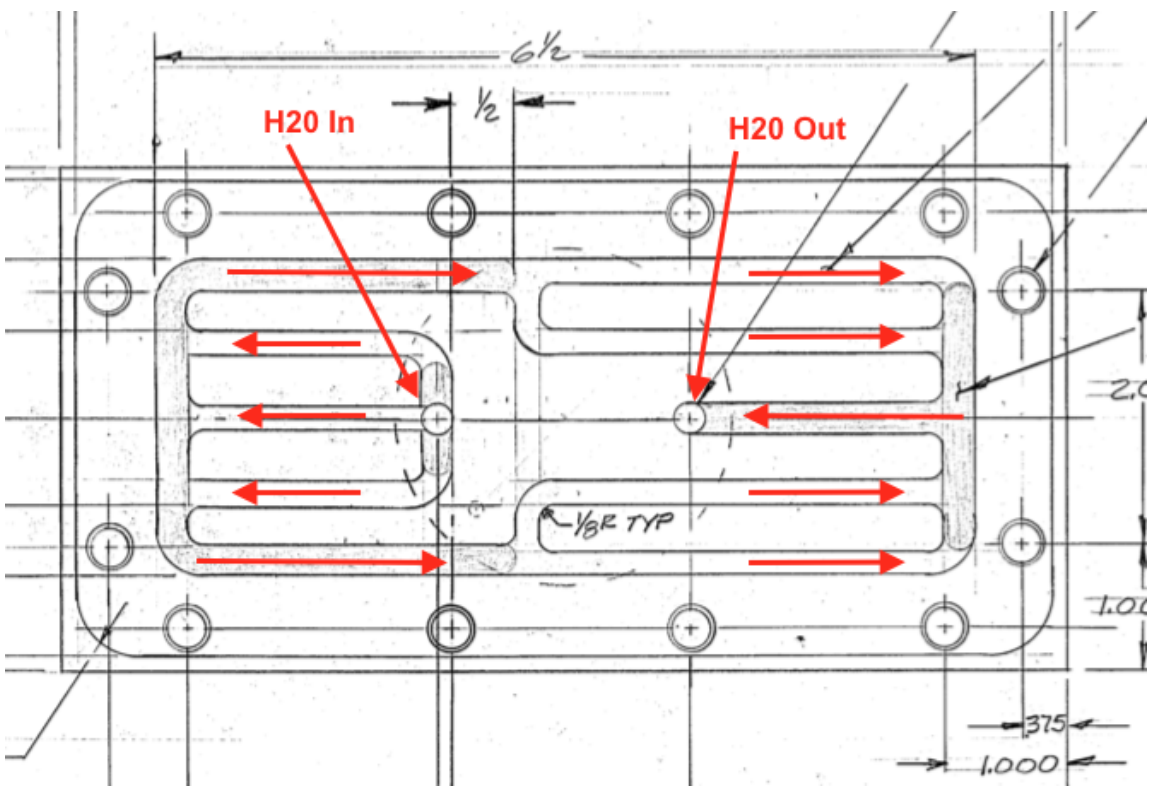

Figure 2: Cooling plate for the ST950/960 stoppers.

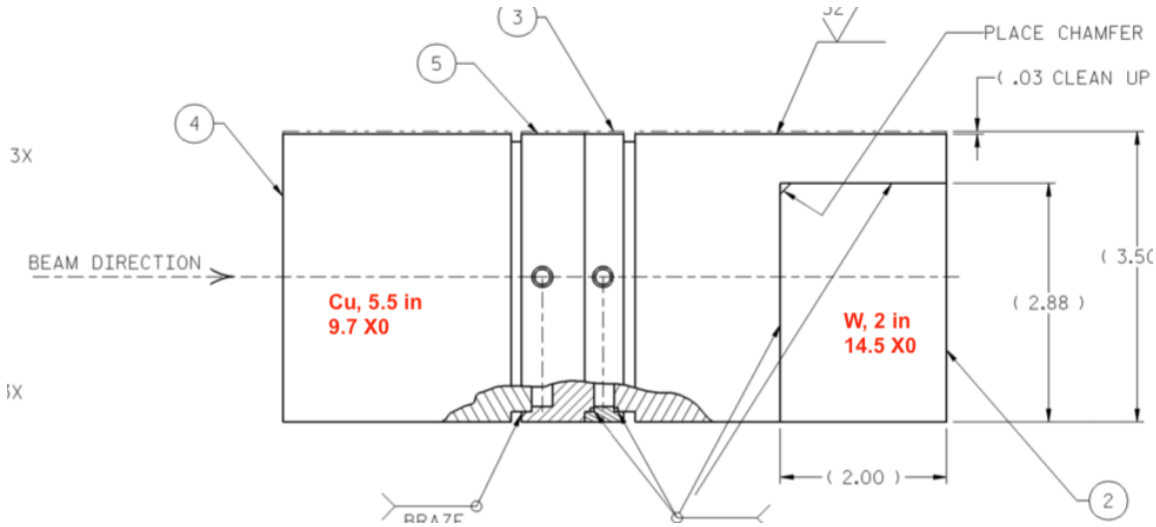

Figure 3: Beam absorbing slug of the ST950 type stopper.

As noted in [1] regarding PEP-II stoppers, when beam strikes the Photon-Electron slug, energy is absorbed along the axis over a radial extent of roughly the Moliere radius, which for copper is about 1.6 cm, and diffuses as heat throughout the slug. With no water cooling applied to the slug, the only cooling mechanisms available are radiation and conduction through the support tube. Because these cooling mechanism are weak, even moderately powered beams can eventually heat the slug up to high temperatures. Permanent damage will certainly occur if the temperature of the slug exceeds the melting point of copper (melting point 1085° C.) or the solidus/liquidus points of the Cu/Au braze alloy (990/1010° C) that was used to connect the slugs to the support tube.

2.1 Radiative cooling

Radiative cooling depends strongly on the absolute temperature. As a result, at relatively low temperature it can ignored, but at a high enough temperature it dominates conduction cooling. In the case of a stopper slug, thermal radiation emitted by the slug will be absorbed by the surrounding vacuum chamber, which will warm up and be cooled by the surrounding air.

Estimates of the net radiative power are given in Table 1 for two different slug temperatures. These estimates include the effect of the surrounding vacuum chamber at a temperature of 90° C. Roughly 90° C is an appropriate temperature for convection cooling of 500 W. In practical terms the temperature of the vacuum chamber makes very little difference to the temperature of the slug because of steep dependence of radiative power on temperature.

The next most important factor for radiative cooling after temperature is the emissivity. Highly polished copper has a low emissivity, which implies it must get to a relatively high temperature to radiate a given power. While the slugs are not highly polished, the surfaces are clean, machined, surfaces, and the actual surfaces should have a higher emissivity than that of highly polished copper. Nevertheless, for the purpose of rating the power capability of the stopper, in the calculation of the radiated power I conservatively assume the emissivity of *polished* copper at elevated temperature, see p. 215 of [3].

2.2 Conductive cooling

In the case of the Photon-Electron Stopper, for power in the range of interest, it turns out that conduction cooling through the slug supports is a relatively minor factor. Values of calculated conductive power are given in Table 1 for two different slug temperatures. The estimates assume all the conduction heat is removed from the support tube end by the surrounding air. In reality the tube end will have an elevated temperature and less power will be cooled by this mechanics. So for the purpose of rating this device I conservatively assume that negligible conduction cooling is taking place.

3 ST950/960

In the case of the ST950/960 stopper beam first hits a copper section where most of the energy is lost and absorbed. Relatively little heat is generated in the slug after the first air gap. Heat is conducted through the solid copper slug to a brazed stainless and copper cooling plate assembly that is bolted to the slug. The cooling plate contains internal cooling passages through which water flows and carries the heat away. This is the dominate cooling mechanism.

The performance rating for this stopper is based on the onset of pressure and flow fluctuations in the cooling water which can cause water flow interlocks to issue a fault. If the beam power is too high, local heating in part of the cooling coil will generate a film of water vapor. The rating is chosen to avoid trips due to pressure fluctuations generated by excessive heat flux. Such trips would not permanently damage the stoppers.

Conversion of liquid water to vapor actually increases the heat transfer coefficient and improves the cooling efficiency as long as the power is below a critical value. When the power exceeds the critical value the heat removed by the vapor can no longer keep up and runaway heating occurs leading to burnout and damage to the stopper. This burnout power is many times higher than that required to cause localized bubbles.

4 Ratings

From the data in Table 1 it can be seen that failure due to melting of the braze joint can be expected with beam power of roughly 3700 W for the uncooled Photon-Electron stopper. As in the case of the previously rated stoppers, conservatively, I allow the maximum acceptable temperature of the Photon-Electron slug to be 500 $^{\circ}C$. Consistent with this limit, I set the rated power for the uncooled Photon-Electron stopper to be 500 W.

A rating for the ST950/960 stopper is given in Table 2 for a range of flow 0.25 gpm and 0.75 gpm. Flow rates greater than 0.75 gpm are not recommended as the high flow velocity can cause significant erosion. If the flow is held in the range between 0.25 gpm and 0.75 gpm, water vapor should not form for beam power up to 1330 W; the beam power rating assigned for flow in that range is 1000 W.

Due to the complicated flow pattern, there is some uncertainty in the values for the pressure drop in Table 2. The listed values for pressure drop were arrived at by assuming the flow channel had an effective length of 16 inches and a hydraulic diameter of 0.192 inches. The actual pressure drop might be somewhat less than the values listed in the table. The flow velocity is highest in the final leg of the return circuit and is the value listed in the table. The heated area was estimated by: (1) assuming all the heat is deposited uniformly over roughly the first four inches of the slug and, (2) from the surface area of the cooling channels in this region.

To summarize, the ratings are:

- 500 W for the uncooled Photon-Electron stopper,
- 1000 W for the ST950/960 stopper with between 0.25 gpm and 0.75 gpm cooling flow.

Table 1: Power and temperature estimates for an un-cooled Photon-Electron stopper.

Slug type	radius cm	length cm	emissivity	temperature $°C$	radiation W	conduction W
Photon-Electron Stopper	6.35	29.8	0.18	500	501	10
Photon-Electron Stopper	6.35	29.8	0.18	990	3725	23

Table 2: Beam power ratings, estimated flow velocity and pressure drop dependence on beam power for a constant cooling wall temperature of 100 $°C$ for the ST950/960 stopper.

flow gpm	velocity fps	ΔP psi	P limit ($T_{wall} = 100\ C°$) W
0.25	2.8	0.2	1330
0.5	5.5	0.6	2400
0.75	8.3	1.2	3450
1	11.1	1.9	4450
1.25	13.9	2.9	5400
1.5	16.6	3.9	6400
gpm range	0.25 - 0.75	Rating: 1000 W	

References

[1] J. Welch, "Beam power ratings for uncooled LCLS-II stoppers," Tech Note LCLS-II-TN-19-06, SLAC, May 2019.

[2] J. Welch, "Beam power ratings for cooled LCLS-II stoppers," Tech Note LCLS-II-TN-19-07, SLAC, June 2019.

[3] F. Kreith, *Principles of Heat Transfer*. Int. Textbook Co, 1967.