LCLS-II-TN-19-06

Beam power ratings for uncooled LCLS-II stoppers*

J. Welch

May 30, 2019

Contents

1 Introduction

Four electron beam stoppers in LCLS-II should never see beam except in the case of a severe accident. And if there is such an accident the beam may be so powerful that no amount of cooling would be sufficient for the stopper to be able to absorb the beam indefinitely. To protect these stoppers, Point Beam Loss Monitors (PBLMs) are deployed. They can detect beam hitting a stopper and generate a BCS trip which turns off the beam before the stopper is damaged. The trip level of the PBLMs must be set low enough to insure that the stopper is not damage if subjected to beam power just below the trip threshold.

The purpose of this note is to establish a power 'rating' such that we can be confident that the stoppers will not fail if an accident occurs where they are exposed to the rated beam power level indefinitely. This rating is not intended to imply that the uncooled stoppers should be used to absorb beam on a normal or routine basis.

*Work supported in part by the DOE Contract DE-AC02-76SF00515. This work was performed in support of the LCLS-II project at SLAC.

2 Stoppers

There are three versions stoppers considered in this note. One version is used for ST60 and ST61. It is quite large and described as a 'Beam Switchyard Stopper' (BSY) in drawing AD-900-292-00. There are also two versions previously used in PEP-II. Depending on availability and fit-up, either or both may be used at LCLS-II. The small version is described in drawing SA-344-660-66. The large version is described in SA-344-606-01.

All three versions use a copper 'slug' as the essential element to stop the beam. The PEP-II stoppers have provision for water cooling the slug, while the BSY stopper does not. The small PEP-II slug is shown in Figure 1. It has a length of about 20 cm or 14 radiation lengths ($X_0 = 1.436\ cm$). The large PEP-II slug is shown in Figure 2. It has a length of about 30 cm or 21 radiation lengths. Both the PEP-II stoppers slugs are brazed to a support tube. The BSY slug is 76 cm or 53 radiation lengths long and is shown in Figure 3. It is supported by a complex linkage system.

3 Thermal analysis

When beam strikes a slug, energy is absorbed along the axis over a radial extent of roughly the Moliere ra-

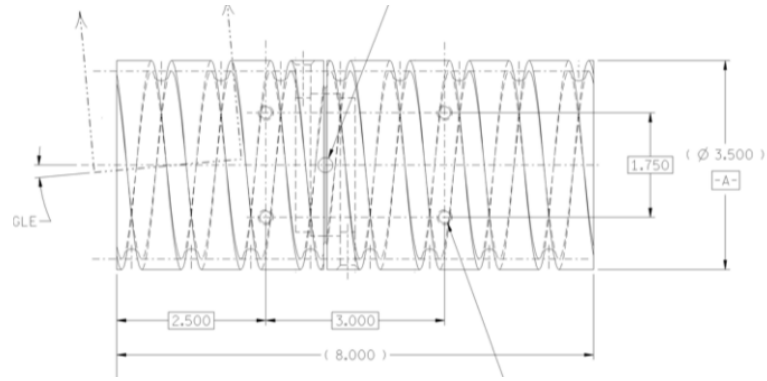

Figure 1: Small PEP-II stopper slug.

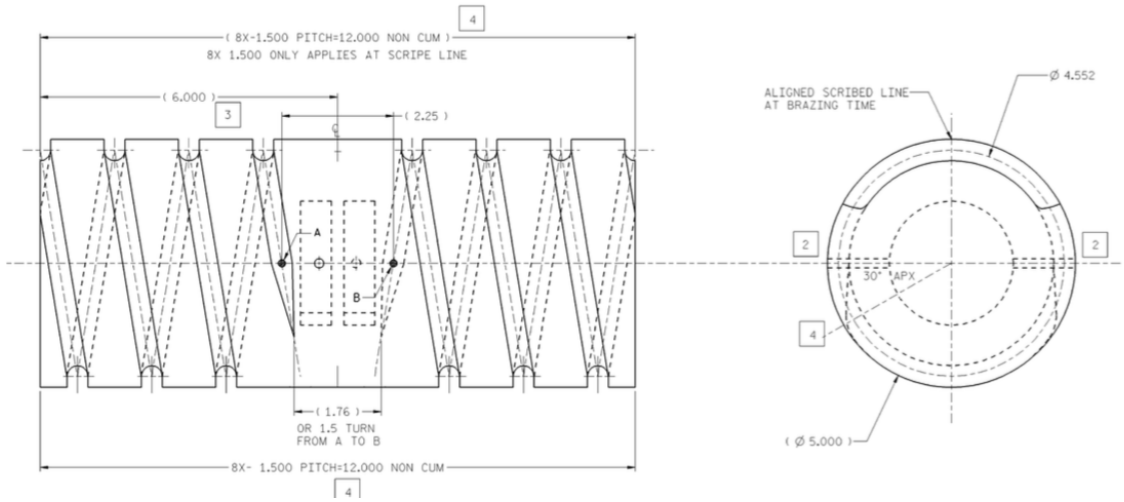

Figure 2: Large PEP-II stopper slug

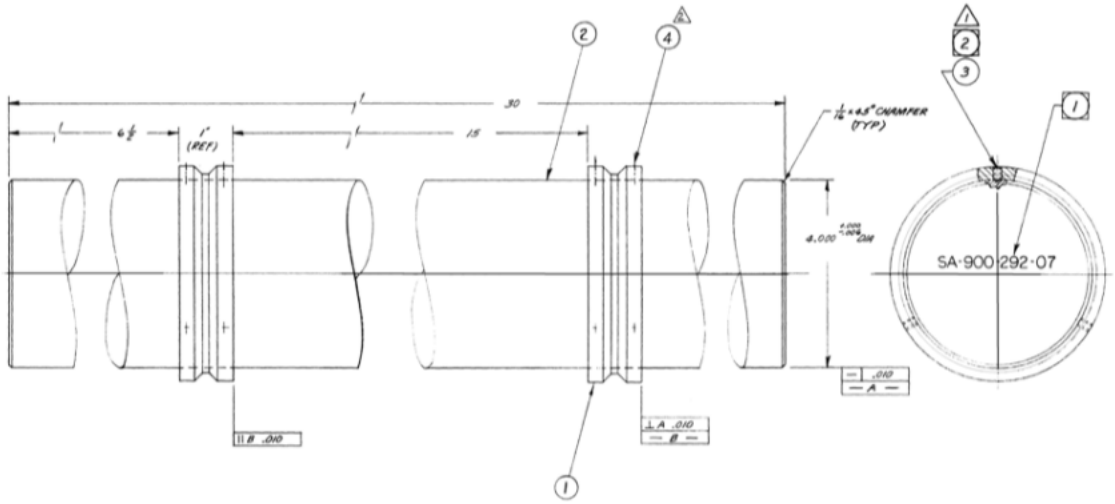

Figure 3: ST60 and ST61 stopper slug.

dius, which for copper is about 1.6 cm, and diffuses as heat throughout the slug. All slugs have sufficient length and radial extent to absorb almost all the beam power incident on them. With no water cooling applied to the slug, the only cooling mechanisms available are radiation and conduction through the support tube. Because these cooling mechanism are weak, even moderately powered beams can eventually heat the slug up to high temperatures. Damage will certainly occur if the temperature of the slug exceeds the melting point of copper (melting point 1085° C.) or the solidus/liquidus points of the Cu/Au braze alloy (990/1010° C) that was used to connect the slugs to the support tube.

3.1 Radiative cooling

Radiative cooling depends strongly on the absolute temperature. As a result, at relatively low temperature it can ignored, but at a high enough temperature it dominates conduction cooling. In the case of a stopper slug, thermal radiation emitted by the slug will be absorbed by the surrounding vacuum chamber, which will warm up and be cooled by the surrounding air.

Estimates of the net radiative power are given in Table 1. These include the effect of the surrounding vacuum chamber at a temperature of 90° C. Roughly 90° C is an appropriate temperature for convection cooling of 500 W. In practical terms the temperature of the vacuum chamber makes very little difference to the temperature of the slug because of steep dependence of radiative power on temperature. Values of calculated radiative power are given in Table 1 for two different slug temperatures.

The next most important factor for radiative cooling is the emissivity. Highly polished copper has a low emissivity, which implies it must get to a relatively high temperature to radiate a given power. While the slugs are not highly polished, the surfaces are clean, machined, surfaces. So the actual surfaces should have a higher emissivity than that of highly polished copper. Nevertheless, for the purpose of rating the power capability of the stopper, in the calculation of the radiated power I conservatively assume the emissivity of *polished* copper at elevated temperature, see p. 215 of [1].

Table 1: Power and temperature estimates for stopper slugs.

Slug type	radius cm	length cm	emissivity	temperature $°C$	radiation W	conduction W
small PEP-II stopper	4.45	20.3	0.18	500	240	65
big PEP-II stopper	6.35	30.5	0.18	500	509	27
ST60, ST61	5.08	76.2	0.18	500	899	0
small PEP-II stopper	4.45	20.3	0.18	990	1784	142
big PEP-II stopper	6.35	30.5	0.18	990	3790	58
ST60, ST61	5.08	76.2	0.18	1085	8959	0

3.2 Conductive cooling

For power in the range of interest, it turns out that conduction cooling is a relatively minor factor. Values of calculated conductive power are given in Table 1 for two different slug temperatures. In the PEP-II versions, the estimates assume all the conduction heat is removed from the support tube end by the surrounding air. In reality the tube end will have an elevated temperature and less power will be cooled by this mechanics. So for the purpose of rating this device I conservatively assume that negligible conduction cooling is taking place.

4 Ratings

From the data in Table 1 it can be seen that failure due to melting of the braze joint can be expected with beam power of roughly 1900 W for the small stopper and 3800 W for the big stopper. For the large BSY stopper, the slug itself will start to melt for beam power around 8900 W. Conservatively, I allow the maximum acceptable temperature of the slug to be $500°C$. Consistent with this limit, I set the rated power for the uncooled PEP-II stoppers at:

- 250 W for the small stopper
- 500 W for the large stopper.

The ST60 and ST61 stoppers were rated in an 2012 email from D. Walz at 500 W, (see Appendix A). In that note Walz assumed, as I did, the maximum acceptable temperature was $500°C$ and a slightly higher emissivity. He calculated that for the slug to radiate 500 W it needs to be about $380°C$. This is in agreement with my results. However, he also said that because the vacuum chamber around the slug is at $90°C$ the net temperature of the slug would be about $500°C$. I included the power radiated from the surrounding vacuum chamber at $90°C$ back to the slug. It does not raise the slug temperature as much as Walz assumed because of the fourth-power dependence of power on temperature. I would rate the ST60 and ST61 stoppers at 900 W.

References

[1] F. Kreith, *Principles of Heat Transfer*. Int. Textbook Co, 1967.

A D. Walz rating for ST60 and ST61

—Original Message—
From: Dieter Walz [mailto:dwalz@stanford.edu]
Sent: Thursday, February 16, 2012 2:56 PM
To: Ibrahimov, Alev
Cc: Iverson, Richard H.; Hast, Carsten
Subject: PPS Beam Stoppers ST 60 and ST 61

Hello Alev,

you requested information on the two PPS beam stoppers ST 60 & 61 located in the Beam Switchyard in the undeflected beam line now supplying beam to the LCLS.

These devices are members of a group of beam stoppers that, together with either another mechanical device or a dipole magnet, fulfill the PPS entry condition for personnel into areas where beam can be delivered. They were not designed to accept beam continuously; any direct beam exposure would be an accident due to failure of one or more other safety system(s).

The active protection element in these stoppers is a 4" diameter x 30" long ($52X_0$) OFE copper cylinder. It is supported on two V-type rails mounted on a tilt table. When in the "IN" position, the cylinder blocks the beam passage. Heat rejection from the cylinder due to accidental beam exposure is by thermal radiation across the vacuum interface to the vacuum vessel, and from there to ambient in the BSY by a combination of natural convection and thermal radiation. Two "IN" microswitches (wired in series) are mounted to the tilt table and are part of the PPS circuit.

In a series of beam tests to purposely destroy typical beam transport system components such as beam stoppers, slits, collimators and dumps conducted in 1970/71, we measured the time to failure and the failure mechanisms, for beam energies in the 20 GeV range and average beam powers from 360 kW to 880 kW [1]. The tests pointed out the necessity for a Beam Containment System (BCS), and also a need to reliably detect catastrophic equipment failures at a time significantly before vacuum gages etc. would trigger a response from the machine protection System (MPS) to terminate beam delivery.

The stoppers were consequently equipped with burn-through monitors in form of two pairs of blowout "fuses" or vacuum spoilers. They are incorporated into the vacuum vessel at 90 deg from the expected location of the maximum of the electromagnetic cascade (6 X_0 for 20 GeV). The second pair is situated a suitable distance downbeam, determined empirically from these destructive tests. This location corresponds to a second shower maximum for the case where a partial meltdown including a volcano-like expulsion of molten copper had occurred at the site of the first shower maximum (thereby shifting shower maximum downbeam by the amount of missing material).

The active element of the blowout fuse is a diaphragm of a low-melting point indium alloy (T melt 59 deg C) which is cast into a stainless steel tube and serves as a barrier between vacuum and atmosphere. This membrane together with a heat collector disc (amplifier) faces the copper cylinder with a view factor of 1.0 (for thermal radiation) when the copper cylinder is in the "IN" position. One fuse of each pair has a platinum resistance temperature sensor (RTD) attached to the back side of the heat collector to give advanced warning of an impending blowout.

This feature could be significant in case a low power beam is accidentally deposited in the stopper and goes undetected for some period of time, or if significant scattered beam power from a neighboring beam line and component is absorbed into the blowout fuse. The beam operator

might then have a chance for corrective action and save the beamline vacuum. This feature will be useless for the case of accidental deposition of a high power beam, since the temperature gradients in the stopper are steep, and excessive amounts of stored energy are in "transit" at the time of an RTD signal.

From the aforementioned destructive tests we measured the response time from "beam on" to perforation of the fuses:

P_{av} = 880 kW 9.5 s
500 kW 10 s
27.5 kW 120 s
5 kW at least 5 minutes (estimate).

For the 500 kW case, there was a radial blowout after 11.8 s , and longitudinal burnthrough occurred after 48 s. An EGS simulation of this stopper geometry for 50 GeV showed $2 \times 10^{-}6$ of the incident beam energy is left at a depth of 30 X_0, and nothing beyond (13082 events). The total radial leakage was 0.035 of the incident beam energy. This means that, at the time of the initial radial blowout and consequential shift of shower maximum to a new location in the forward direction, there are 20 X_0 left to draw upon before significant axial energy leakage occurs. In other words, the process of formation of a superheated volume of copper near shower maximum followed by cataclysmic expulsion of molten copper could repeat itself perhaps 5 times before significant energy leakage through the downbeam face of the stopper occurs. This , of course, does not include muons and neutrons, which keep on coming all the time during beam "on" conditions.

The destructive tests revealed another important piece of information, namely that even for very high beam energies and high average beam powers, and beam exposure lengths many times the recorded burnthrough time, there was always some material left undamaged in the front part of each target or stopper (equivalent to 1.5 to 2 X_0). This residual material acts as a spoiler to scatter the beam and broaden its momentum spread, thereby reducing both the radiation and heat source terms at locations well downbeam of primary beam targeting.

Transverse beam spot sizes have greatly decreased from those available during the destructive beam tests in 1970/71. To guarantee retention of residual solid material acting as a scatterer in case of a burnthrough up front, we have inserted a 3 X_0 long x 1" diameter piece of titanium into the front face of the copper stopper. This material can survive beams with a sigma transverse size of 100 μm or even lower. At 5×10^{10} e+/-, the temperature rise at the downbeam limit of the titanium is a modest 110 deg C / bunch (simulations were done for 265 μm x 42 μm). The maximum value in the copper was found to be 350 deg C at a total depth of 5 X_0. While this would be considered excessive near the surface from a thermal stress and thermal shock wave point of view, it should not cause any problems deep inside the copper cylinder (which is a fully restrained body) .

Historically, the PPS beam stoppers were not considered beam dumps and continuous power absorbers. They were always meant to safely contain a few a few pulses at maximum energy and intensity. Should a beam accidentally target on a stopper, the protection ionization chamber would terminate beam delivery in 2 to 3 pulses. Next in order of response is the temperature warning from the RTDs, followed by blowout of the burnthrough (BTM) monitor.

In the past, I have given an average beam power limit of 500 W as being a reasonable value for safe, long term power deposition into one of these stoppers. This is based on the following considerations and characteristic properties of this type of devise. At this power level we obviously

want to trigger the BTM, i.e. melt the diaphragm. The total surface area of the copper cylinder is $\sim 2500cm^2$. Assume for the moment that the cylinder has a uniform surface temperature (rather than the one prescribed by the longitudinal shower profile and various heat transfer considerations). Then, in the absence of heat losses to the support rails, the heat flux to be radiated off for P_{av} = 500W and steady state is $\sim 0.2W/cm^2$. For an emissivity of 0.2 of black body, the Stefan-Boltzmann law results in a temperature differential to ambient of $\sim$ 380 deg C. Here, ambient is really the vacuum chamber temperature which, in turn, looses the heat by a combination of natural convection and thermal radiation, with a small amount by conduction to the stainless steel base. The corresponding temperature differential to the tunnel ambient is $\sim$ 90 deg C. This means that for a tunnel ambient temperature of 25 to 30 deg C, the copper cylinder surface temperature might run $\sim$ 500 deg C, which is about as high as as one might want to go allowing for the highly nonlinear shape of the shower.

The specific heat capacity of the copper cylinder is $\sim 2 \times 10^4$ W-s / deg C . For an arbitrarily assumed temperature rise of all the copper mass of 500 deg C, the total heat capacity is $\sim 10^7$ W-s, or $\sim$ 170 kW-min. Thus, a 10 kW beam would raise the copper temperature to 500 deg C in $\sim$ 17 minutes.

[1] D. R. Walz , "Tests and description of beam containment devices and instrumentation - A new dimension in safety problems" , IEEE Trans. Nucl. Sci. Vol. NS-20, No. 3, 465-470,(June 1973). Also Report No. SLAC -PUB- 1223, (March 1973). (Paper presented at the 1973 Particle Accelerator Conference in San Francisco).

I hope the above answered your questions.

Greetings, Dieter