LCLS Timing Software and Plan

April 24 2012

Kukhee Kim

ICD Software

SLAC National Accelerator Laboratory

Controls

Contents

- Current configuration
- SLAC specific features
- On going issues
- Future plan and issues

Timing System Configuration

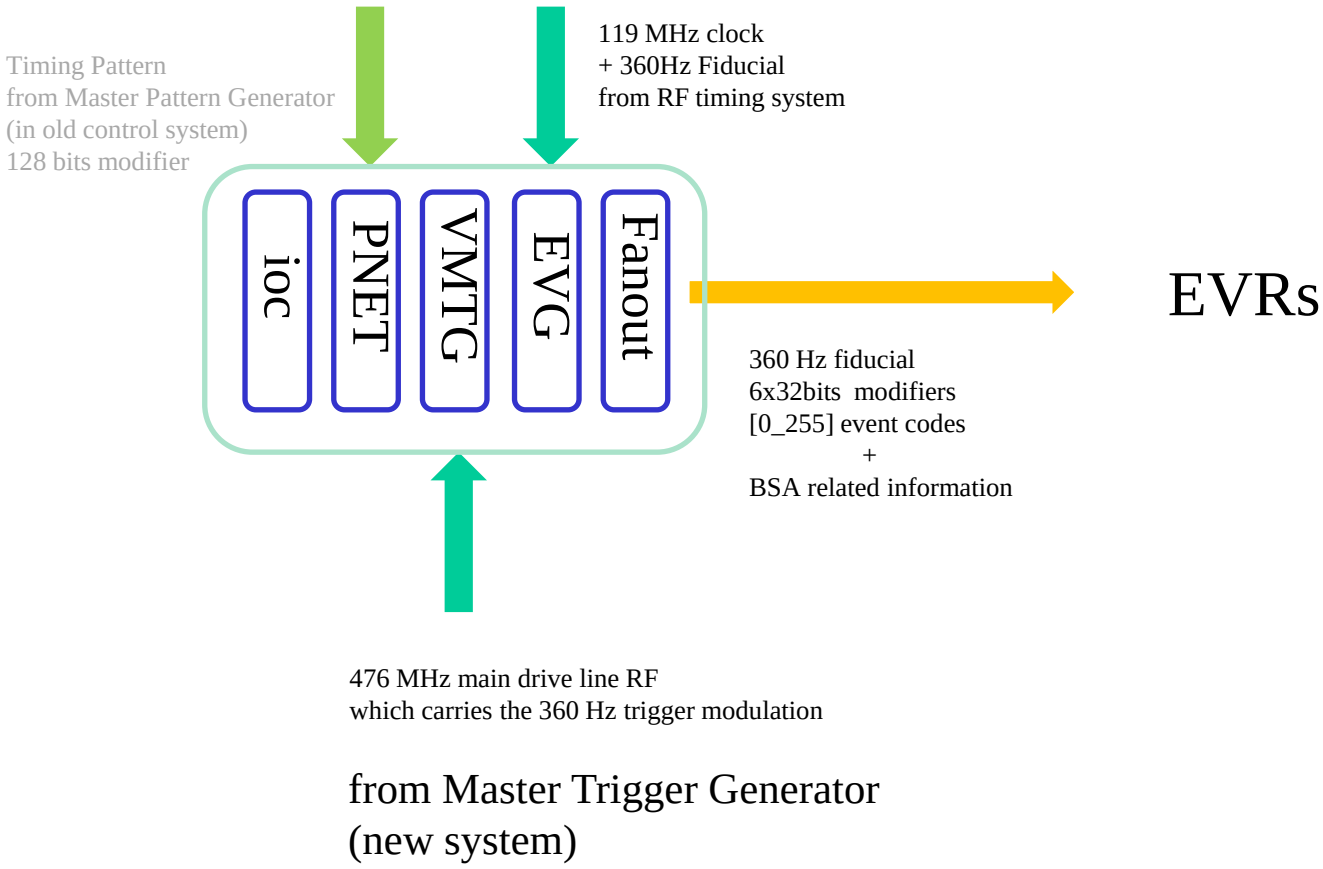

Current Configuration

- Master Pattern Generator (in old control system) generates 128 bits timing pattern (+ beam code + pulse Id) at 360 Hz and broadcasts it on PNET
- PNET module in EVG IOC receives the timing information and drives the 360 Hz timing processing
- EVG software evaluates the timing pattern from the PNET and makes the extended timing pattern with programmed logic
  - timeslot n with m Hz
  - ....
- Software also generates and transfer the information from EVG to EVR
  - 360Hz pulse Id embedded timestamp
  - Event codes
  - BSA information
- Software maintains the timing pipeline

Beam Synchronous Acquisition

- Beam Synchronous Acquisition (BSA):
  - Acquire all beam-dependent scalars across multiple IOCs on the same pulse over multiple pulses of a certain kind (not just x-pulses-in-a-row) up to 120Hz.
  - Acquire up to 2800 values per scalar in one acquisition request.
  - Each value of the 2800 values can be an average of up to 1000 values.
  - Each acquisition request can specify:
    - Beam code (defines project, 1 = LCLS)
    - Machine conditions of interest – rate, TS, permits, etc
  - Provide constant 1HZ beam-synchronous data for channel archiver and displays

BSA data gethering

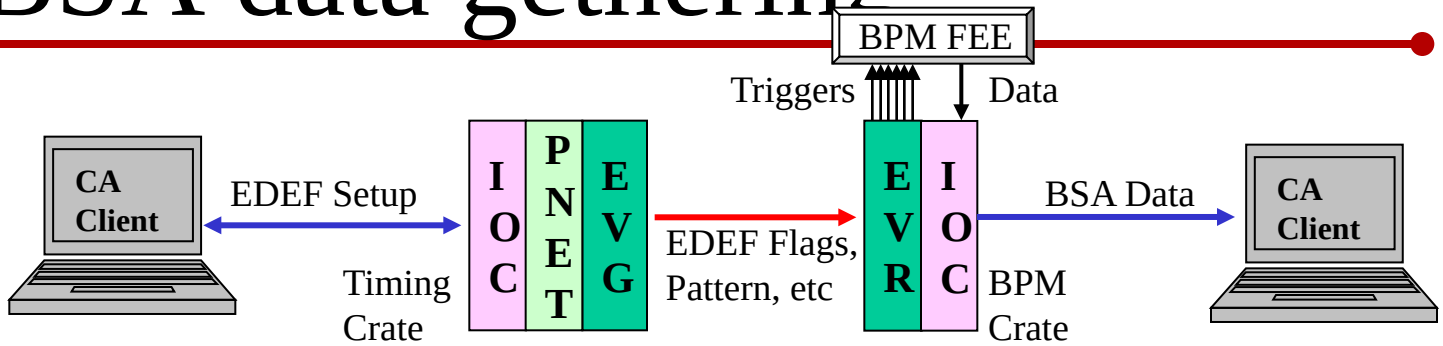

- Data gathering part consists of the following actions:
  - BSA event definition (EDEF) setup and start request done on the EVG IOC.
  - 360hz checking on the EVG IOC with user notification when finished.
  - 360hz requests (acquisition control) sent by the EVG IOC to all EVR IOCs via fast fiber optic link.
  - Data checking, averaging, and array update per scalar record per request on the EVR IOCs.
- Data on EVR IOC must be available within 7.3 msec after beam or it will be lost, even when beam is less than 120hz. EDEF will finish with arrays that are not complete if this time budget cannot be met.
- For an acquisition at full beam rate (ie, 30hz), if data is acquired at a lower rate (ie, 10hz), the array will not be complete. Use rate-limit bits as-needed when setting up the EDEF.
- Implementation is all EPICS record-based.

Pipeline, Pattern & Event Code

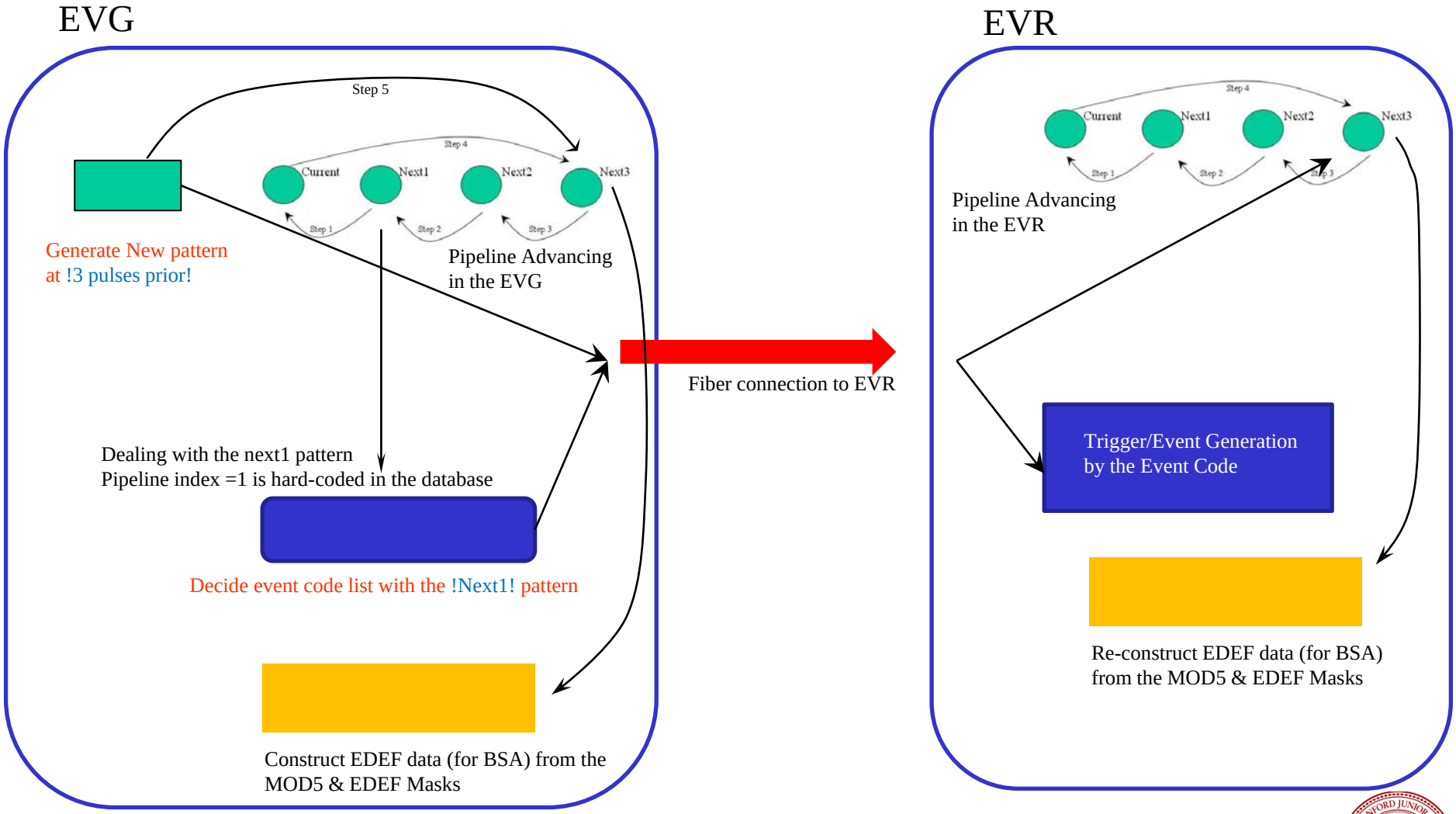

BSA & EDEF message

EVG side

Pattern for Next3

Modifiers

TimeStamp

EDEF masks

+ + AvgDone, Minor, Major, Init

MOD5 for BSA masks (active)

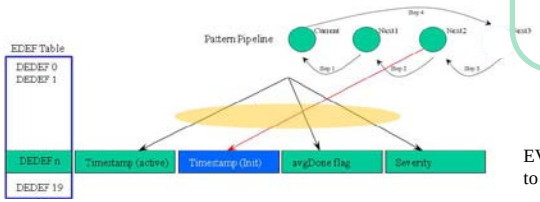

EVG&EVR do exactly same processing to update the EDEF table

Fiber optic connection

Step 5

EVR side

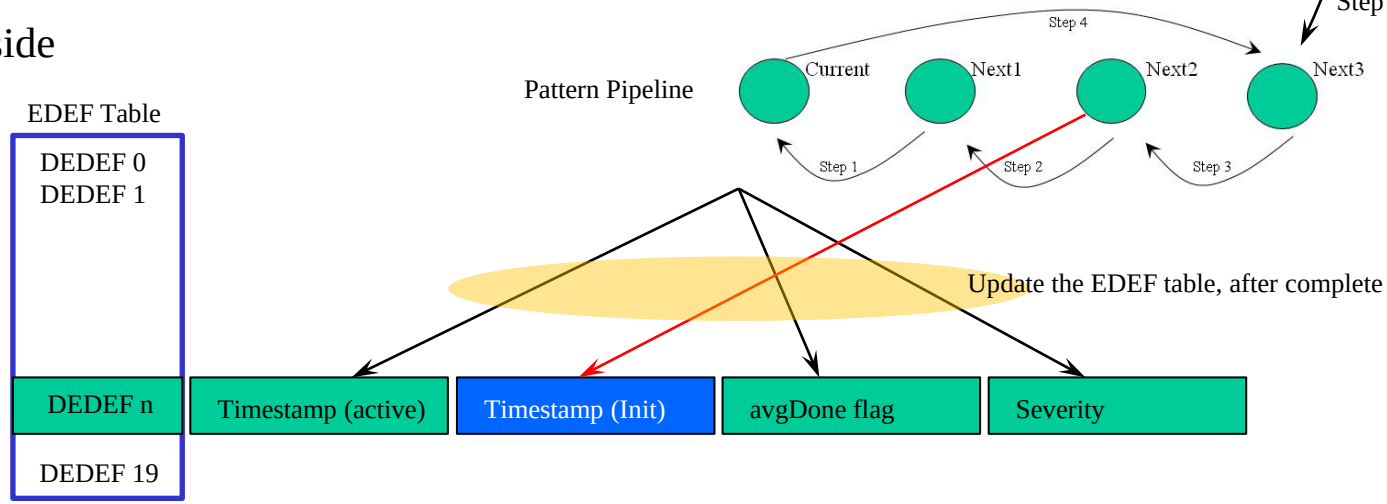

Update the EDEF table, after complete the pipeline advancing

On going issue

- Switch PNET to VMTG (MTG)
  - Due to the retirement of MPG in old control system
  - VMTG only provides 360 Hz fiducial + timslot 0 which is synchronized with AC power line
  - EVG software decided timing information/timing pattern which programmed by the evGui
  - EVG software also decided pulse Id
  - Pattern Bit Generator (PABIG) software module will do the timing pattern business in the EVG
  - Keep use upper level EVG software

Software Stack for EVG

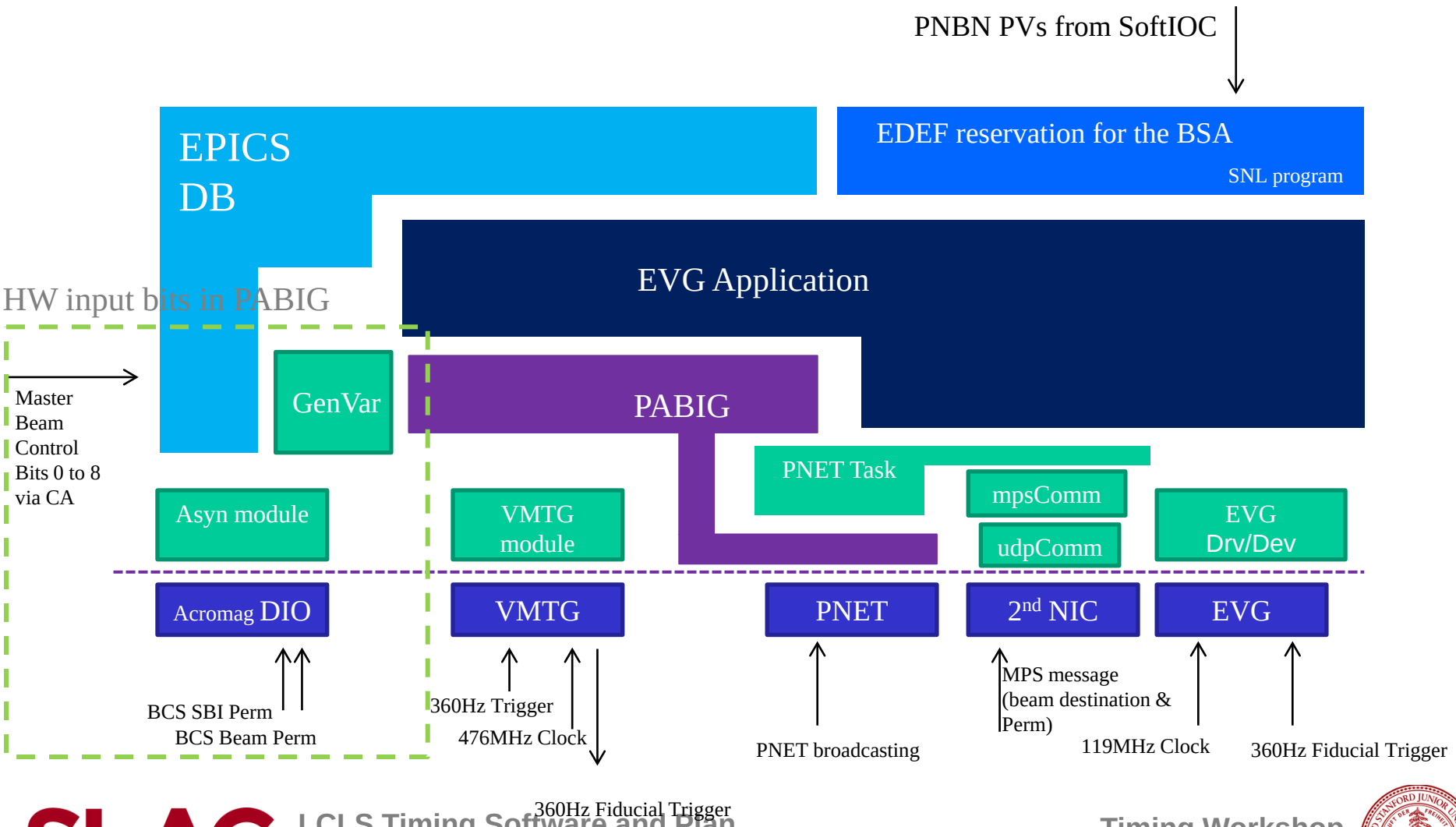

Switch from PNET to VMTG

- PNET task need to be delayed ~ 150 usec after the PNET IRQ to wait the MPS message.
  - PNET IRQ is using HW_TIMER to make the delay
  - The PNET ISR implement 150 usec delay on the HW_TIMER
  - The callback for the HW_TIMER releases signal to proceed the PNET Task.
- VMTG has configurable IRQ delay
  - Configure the VMTG IRQ delay as ~570 usec
  - The VMTG IRQ is occurred at 150 usec after the PNET IRQ

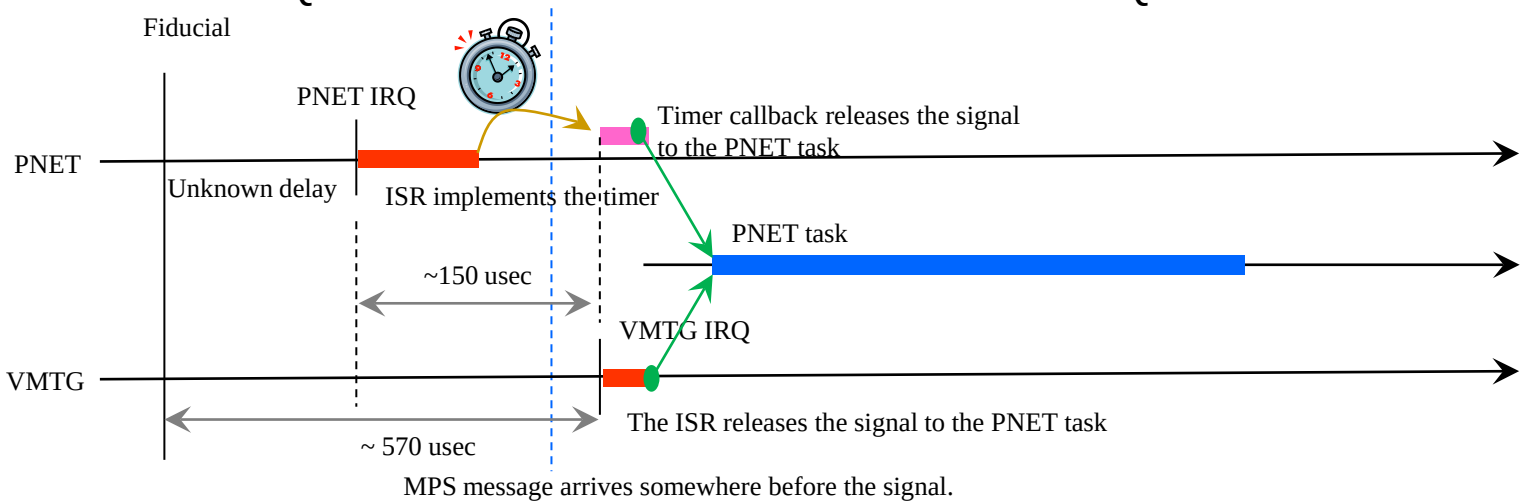

evGui

Revolution from text base timing configuration to visual timing configuration

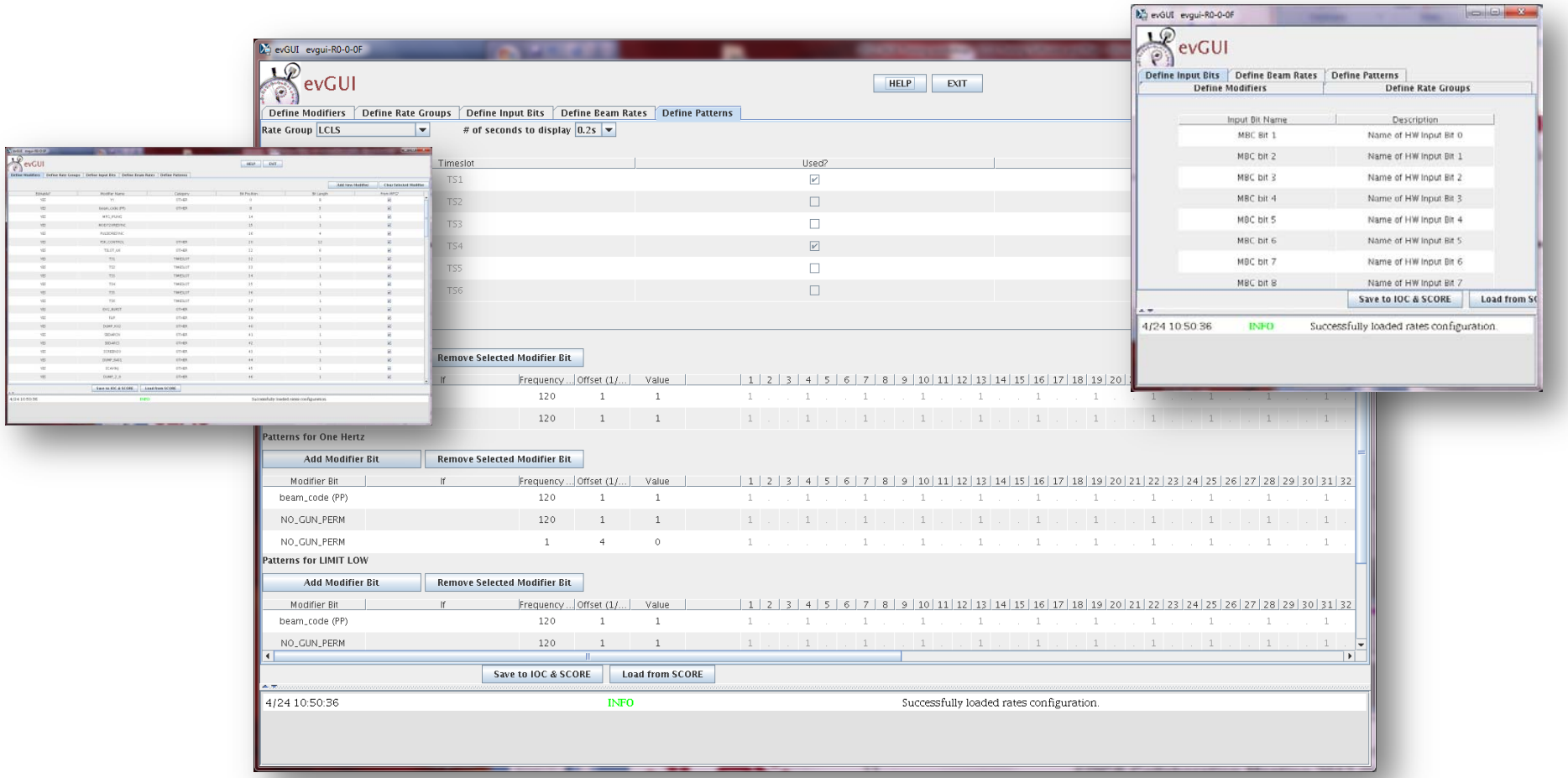

Future Plan and Issues (1)

- merge to main stream
  - SLAC timing software has been diverse from community
  - need to know, what is current status of new driver software
  - need to know, what is future plan for firmware/register map
  - need to get clear understanding, what is the SLAC specific features in the software
    - BSA
    - Timing Pattern
    - Pipeline?

Future Plan and Issues (2)

- Support new platform
  - Linux
  - uTCA
  - Some other new embedded platform including the EVR embedded in a FPGA
- Improvement for BSA
  - more performance
  - more easier/flexible configuration
  - new requirements from physicists